DATA SHEET

vibro-meter®

# CP751 dynamic pressure sensor

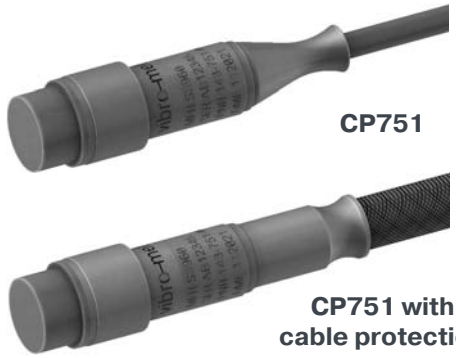


## KEY FEATURES AND BENEFITS

- From the vibro-meter® product line
- Operating temperature range: −40 to 700°C
- Pressure sensitivity: >120 pC/bar
- High-pressure capability: up to 350 bar
- Frequency response: 2 to 10000 Hz
- Ex certified for use in hazardous areas (potentially explosive atmospheres)
- Single-crystal piezoelectric material
- Integral mineral-insulated (MI) cable
- Versions with additional cable protection

## APPLICATIONS

- Dynamic pressure monitoring over a very wide temperature range, requiring very high reliability
- Hazardous areas (potentially explosive atmospheres) and/or harsh industrial environments

## DESCRIPTION

The CP751 is a dynamic pressure sensor (piezoelectric pressure sensor) from Parker Meggitt's vibro-meter® product line.

The CP751 sensor measures dynamic pressure via a metal membrane on the sensing element, which features single-crystal piezoelectric material in a compression-mode design and internal case insulation, housed in a special high-temperature alloy case.

The CP751 uses single-crystal material and a special acceleration-compensated design in order to produce an extremely stable and reliable device, even at extreme temperatures (up to 700°C).

The CP751 dynamic pressure sensor is fitted with an integral mineral-insulated (MI) cable that is hermetically attached to the sensor and connector in order to produce a sealed assembly. The MI cable uses twin conductors and is terminated with either a vibro-meter® high-temperature or LEMO type 0 connector. Versions of the sensor with additional cable protection (a stainless-steel double overbraid) are also available.

## DESCRIPTION *(continued)*

A range of compatible cable assemblies are available to connect the sensor to a monitoring system, such as a VM600$^{Mk2}$/VM600 or VibroSmart® system, via the required IPC707 signal conditioner.

The CP751 dynamic pressure sensor is designed for long-term monitoring or development testing over very wide temperature ranges in extreme environments, such as gas turbines. Accordingly, all versions of the CP751 sensor are Ex certified for installation in hazardous areas (potentially explosive atmospheres).

As the CP751 sensor head has the same reduced dimensions as the CP21x sensors, it can easily be used as a replacement for these devices as well as other larger dynamic pressure sensors. This is enabled by a range of specific mounting adaptors and seals that are available for use with different pressure measurement apertures.

For specific applications, contact your local Parker Meggitt representative.

## SPECIFICATIONS

### General

| | |
|---|---|
| Input power requirements | : None |
| Signal transmission | : 2-pin system, insulated from case, charge output |
| Signal processing | : IPC707 signal conditioner (charge converter) |

### Operating

(At 23°C ±5°C, 73°F ±9°F)

| | |
|---|---|
| Sensitivity (typical, at 2 Hz) | : >120 pC/bar (8.3 pC/psi).<br>137 pC/bar (9.4 pC/psi) nominal ±10%. |
| Sensitivity deviation | : –2 to 12% over operating temperature range (–40 to 700°C).<br>See also **Typical response curve on page 5**. |
| Dynamic measurement range (random) | : 0.0005 to 50 $bar_{peak}$ (0.0073 to 725.2 $psi_{peak}$).<br>Note: The dynamic measurement range is largely determined by the IPC707 signal conditioner used. |
| Overload capacity (spikes) | : Up to 350 bar (5076 psi)<br>(static + dynamic components) |
| Linearity | : ±1% over dynamic measurement range |
| Acceleration sensitivity | : ⩽0.0002 bar/g (0.0029 psi/g) in axial direction (at 120 Hz).<br>⩽0.0003 bar/g (0.0044 psi/g) in all directions (from 10 Hz to 10 kHz). |
| Resonant frequency | : >50 kHz.<br>70 kHz nom. |
| Frequency response | : 2 to 10000 Hz ±5%.<br>Note: The lower cutoff frequency is determined by the IPC707 signal conditioner used. |
| Thermal transients | : ⩽0.1 bar (1.45 psi) signal perturbation<br>(for example, due to pulse noise) |
| Capacitance (nominal) | |
| • Pin to pin | : 60 pF for sensor + 200 pF/m (61 pF/ft) of cable |
| • Pin to case/shield | : 7 pF for sensor + 300 pF/m (91 pF/ft) of cable |

## SPECIFICATIONS *(continued)*

| | |
|---|---|
| Internal insulation resistance (pin to ground) | : $\geqslant 10^9$ Ω at 23˚C (73˚F).<br>$\geqslant 10^8$ Ω at 300˚C (572˚F).<br>$\geqslant 10^6$ Ω at 700˚C (1292˚F). |
| Internal resistance (pin to pin) | : $\geqslant 10^9$ Ω at 23˚C (73˚F).<br>$\geqslant 10^7$ Ω at 300˚C (572˚F).<br>$\geqslant 5 \times 10^4$ Ω at 700˚C (1292˚F). |

## Environmental

| | |
|---|---|
| Sensor temperature range | : –40 to 700˚C (–40 to 1292˚F).<br>See **Typical response curve on page 5**. |
| Connector temperatures | |
| • vibro-meter® high-temperature connector | : 650˚C (1202˚F) max. |
| • vibro-meter® LEMO type 0 connector | : 120˚C (248˚F) max. |
| Shock acceleration | : <1000 $g_{peak}$ (half sine impulse, 1 ms duration) along sensitive axis |
| Corrosion | |
| • Sensor housing | : Special high-temperature nickel alloys |
| • MI cable sheath | : Special high-temperature nickel alloy |
| • MI cable protection (overbraid) | : Stainless steel AISI 304 (DIN 1.4301) |
| Construction | : Hermetically welded seals.<br>Note: Helium leak tested to $10^{-9}$ mbar•l/s. |
| Humidity | : 100% humidity has no influence |
| Hydrogen | : Hydrogen atmosphere has no influence |

## SPECIFICATIONS *(continued)*

### Potentially explosive atmospheres

Available in Ex approved versions for use in hazardous areas

| Type of protection Ex ia: intrinsic safety | | |
|---|---|---|
| Europe | EU type examination certificate | Ex II 1 G (Zones 0, 1, 2)<br>Ex ia IIC T6…714°C Ga<br>LCIE 17 ATEX 3003 X |
| International | IECEx certificate of conformity | Ex ia IIC T6…714°C Ga<br>IECEx LCIE 16.0054X |
| North America | cCSAus certificate of compliance | Class I, Division 1, Groups A, B, C, D<br>Ex ia IIC T6…714°C Ga<br>Class I, Zone 0<br>AEx ia IIC T6…714°C Ga<br>cCSAus 70124133 |
| Russian Federation | EAЭC RU certificate of conformity* | 0Ex ia IIC T6…714°C Ga X<br>EAЭC RU C-CH.АД07.B.03025/21 |

| Type of protection Ex nA: non-sparking | | |
|---|---|---|
| Europe | Type examination certificate | Ex II 3 G (Zone 2)<br>Ex nA IIC T6…714°C Gc<br>LCIE 17 ATEX 1004 X |
| International | IECEx certificate of conformity | Ex nA IIC T6…714°C Gc<br>IECEx LCIE 16.0054X |
| North America | cCSAus certificate of compliance | Class I, Division 2, Groups A, B, C, D<br>Ex nA IIC T6…714°C Gc<br>Class I, Zone 2<br>AEx nA IIC T6…714°C Gc<br>cCSAus 70124133 |
| Russian Federation | EAЭC RU certificate of conformity* | 2Ex nA IIC T6…714°C Gc X<br>EAЭC RU C-CH.АД07.B.03025/21 |

*Not engraved/marked on all products.

⚠ **For specific parameters of the mode of protection concerned and special conditions for safe use, refer to the Ex certificates that are available from Parker Meggitt.**

⚠ **For the most recent information on the Ex certifications that are applicable to this product, refer to the *Ex product register (PL-1511) document* that is available from Parker Meggitt.**

## SPECIFICATIONS *(continued)*

**Approvals**

| | |
|---|---|
| Conformity | : European Union (EU) declaration of conformity (CE marking).<br>EAC marking, Eurasian Customs Union (EACU) certificate/declaration of conformity. |
| Electromagnetic compatibility | : EMC compliant (2014/30/EU):<br>EN 61000-6-2:2005.<br>EN 61000-6-4:2007 + A1:2011. |
| Electrical safety | : EN 61010-1:2010 |
| Environmental management | : RoHS compliant (2011/65/EU) |
| Hazardous areas | : Ex approved (see **Potentially explosive atmospheres on page 4**) |

## Calibration

Dynamic calibration at factory at 1 $bar_{peak}$ and 2 Hz (23°C, 73°F). No subsequent calibration necessary.

## Mechanical

| | |
|---|---|
| Dimensions | : See **Mechanical drawings on page 6** |
| Weight | |
| • Sensor head | : 20 g (0.044 lb) approx. |
| • MI cable | : 50 g/m (0.034 lb/ft) approx. |
| • Connector | : 20 g (0.044 lb) approx. |
| Cable | : Mineral-insulated (MI) cable, two conductors.<br>Versions with additional cable protection (overbraid) available. |
| Connection | : vibro-meter® high-temperature or LEMO type 0 connector |
| Mounting | : See mounting adaptors in **Accessories on page 8**.<br>Refer also to the *Pressure measurement chains using CPxxx piezoelectric pressure sensors installation manual*. |

## TYPICAL RESPONSE CURVE

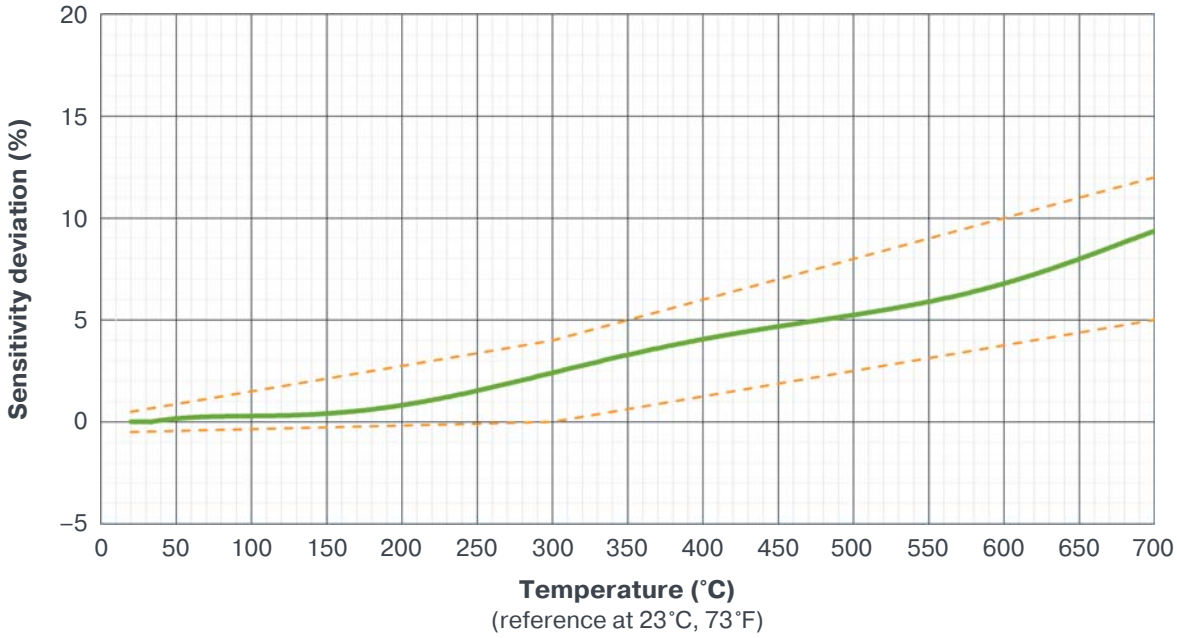

## MECHANICAL DRAWINGS

### CP751 with vibro-meter® LEMO type 0 connector

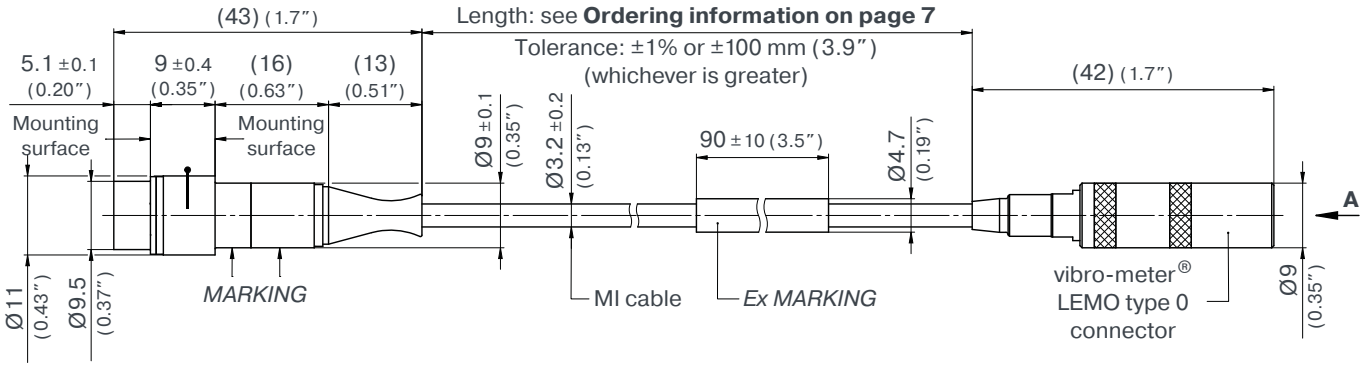


Note: All dimensions in mm (in) unless otherwise stated.

**Wiring diagram**

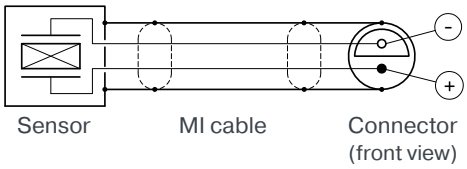


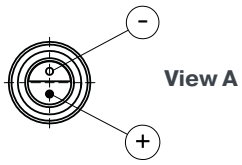


### CP751 with vibro-meter® high-temperature connector

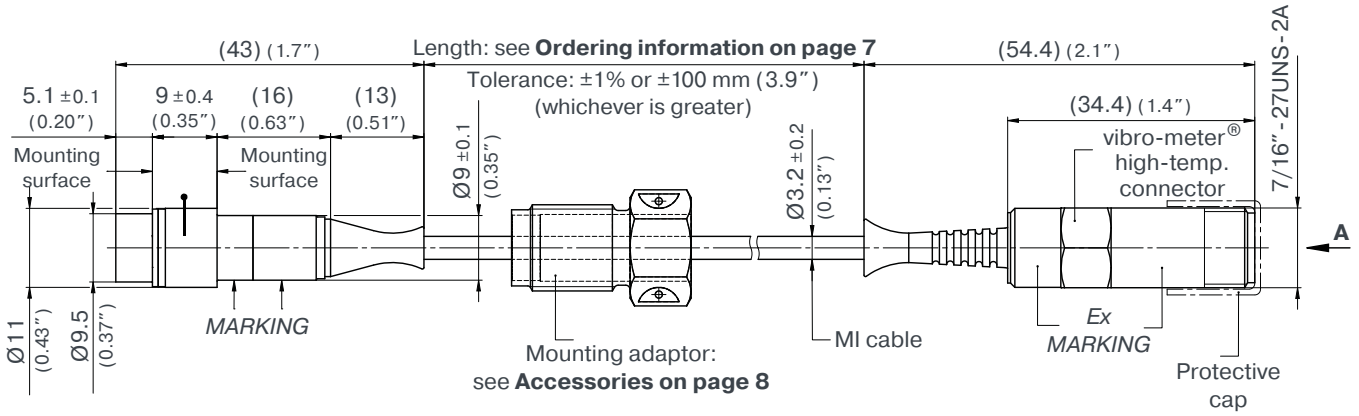


Note: All dimensions in mm (in) unless otherwise stated.

**Wiring diagram**

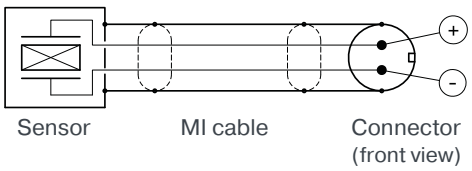


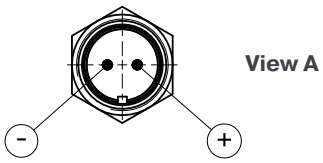

## CP751 with vibro-meter® high-temperature connector and cable protection

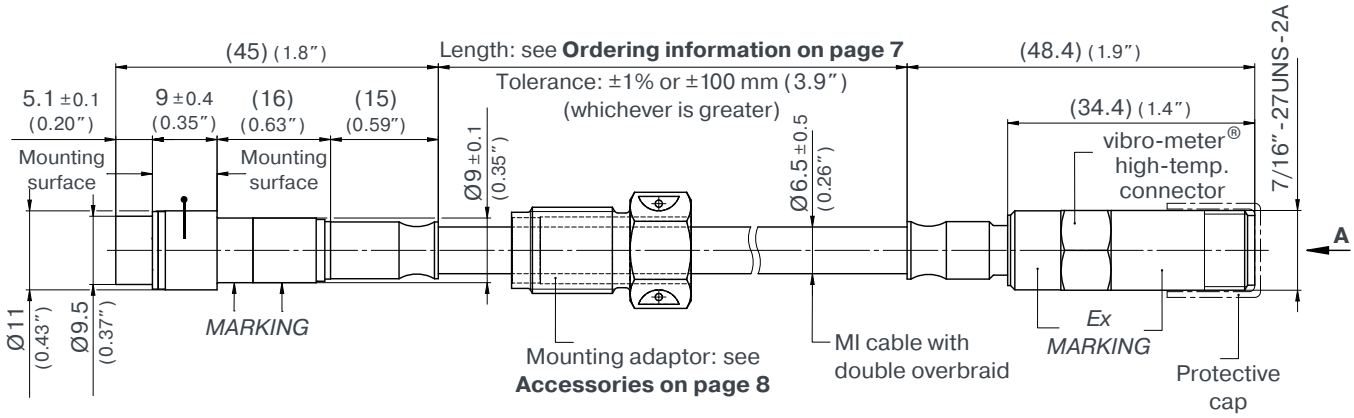


Note: All dimensions in mm (in) unless otherwise stated.

**Wiring diagram**

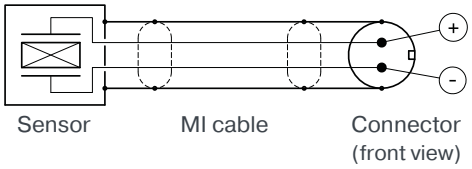


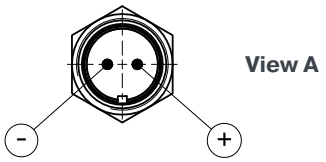


## ORDERING INFORMATION

To order, please specify the version(s) of the CP751 dynamic pressure sensor required …

| Type | Designation | Integral cable length | Part number (PNR) |
|---|---|---|---|
| CP751 | Dynamic pressure sensor with vibro-meter® LEMO type 0 connector | 1 m (39.4″) | 143-751-000-011 |
| | | 2 m (78.7″) | 143-751-000-021 |
| | | 3 m (118.1″) | 143-751-000-031 |
| | | 5 m (196.9″) | 143-751-000-041 |
| | | 12.5 m (492.1″) | 143-751-000-051 |
| CP751 | Dynamic pressure sensor with vibro-meter® high-temperature connector<br>Note: Includes integrated mounting adaptor | 1 m (39.4″) | 143-751-000-111 |
| | | 2 m (78.7″) | 143-751-000-121 |
| | | 3 m (118.1″) | 143-751-000-131 |
| | | 5 m (196.9″) | 143-751-000-141 |
| | | 12.5 m (492.1″) | 143-751-000-151 |
| CP751 | Dynamic pressure sensor with vibro-meter® high-temperature connector and cable protection (overbraid)<br>Note: Includes integrated mounting adaptor | 1 m (39.4″) | 143-751-000-211 |
| | | 2 m (78.7″) | 143-751-000-221 |
| | | 3 m (118.1″) | 143-751-000-231 |
| | | 5 m (196.9″) | 143-751-000-241 |
| | | 12.5 m (492.1″) | 143-751-000-251 |

## ACCESSORIES

### MA104 mounting adaptor for CP751 with vibro-meter® LEMO type 0 connector

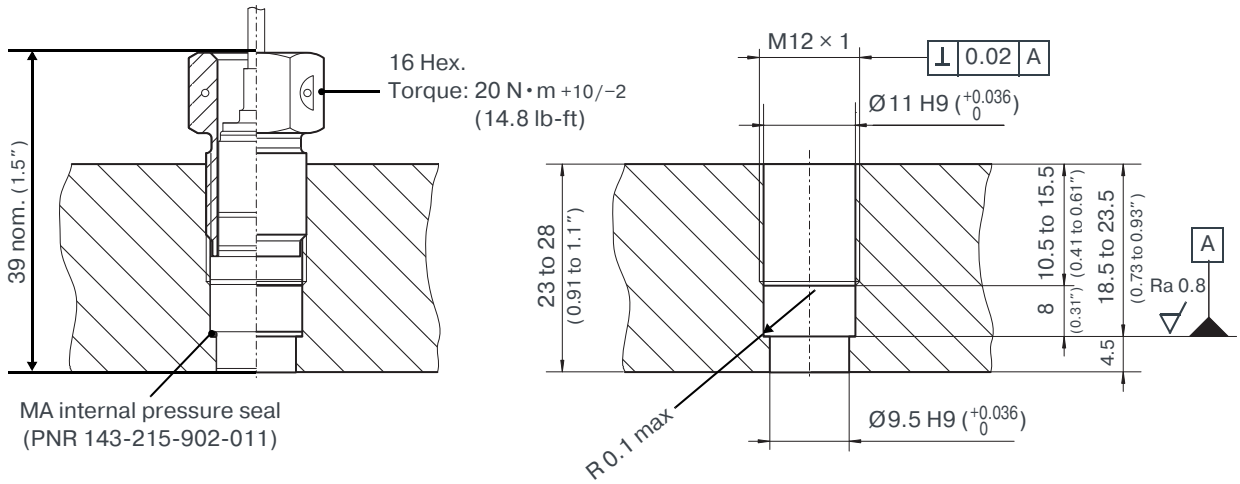


Note: All dimensions in mm (in) unless otherwise stated.

| Type | Designation | Part number (PNR) |
|---|---|---|
| MA104 | Mounting adaptor.<br>Note: The MA104 mounting adaptor does not include the MA seal below. | 809-104-000-011 |
| MA seal | MA internal pressure seal | 143-215-902-011 |

### Cable assemblies

| | |
|---|---|
| EC069 | Refer to the product drawing |
| EC112 | Refer to the product drawing |
| EC119 | Refer to the product drawing |
| EC153 | Refer to the product drawing |
| EC222 | Refer to the product drawing |
| EC390 | Refer to the product drawing |

### Signal conditioner

| | |
|---|---|
| IPC707 | Refer to the data sheet |

### Galvanic separation unit

| | |
|---|---|
| GSI127 | Refer to the data sheet |

Parker Hannifin Corporation – usually referred to as just Parker – is a global leader in motion and control technologies, providing precision-engineered solutions for a wide variety of mobile, industrial and aerospace markets. For more than a century the company has been enabling engineering breakthroughs that lead to a better tomorrow.

Parker Meggitt joined the Parker Aerospace Group in September 2022 following the successful acquisition of Meggitt PLC, a world leader in aerospace, defense and energy. This includes the Meggitt facility in Fribourg, Switzerland, operating as the legal entity Meggitt SA (formerly Vibro-Meter SA). Accordingly, the vibro-meter® product line is now owned by Parker.



In this publication, a dot (.) is used as the decimal separator and thousands are separated by thin spaces. Example: 12345.67890.



### Sales offices and distributors

Parker has sales offices and distributors all around the world. For information on your local contact, please visit our website.

### Local representative

### Parker Meggitt (Meggitt SA) office

Parker Meggitt,
Motion, Power & Sensing Division (MPSD).
Meggitt SA, Route de Moncor 4, Case postale,
1701 Fribourg, Switzerland.
www.meggittsensing.com/energy
www.meggitt.com
www.parker.com